# PRODUCT SHEET

**Description:**
Shower Hinge "CPH III", 180 DG, Glass/Glass, CPL, 6-10mm Glass Thickness, W/Angle Adjustment Function, & 15DG Return Function, Brass Material, Chamfered Edges

**Item number:**
15.24.059-0

| Units | Box | Carton | HS Code | Barcode |
|---|---|---|---|---|
| Pcs. | 1 | 20 | 8302100090 | 5704866502214 |

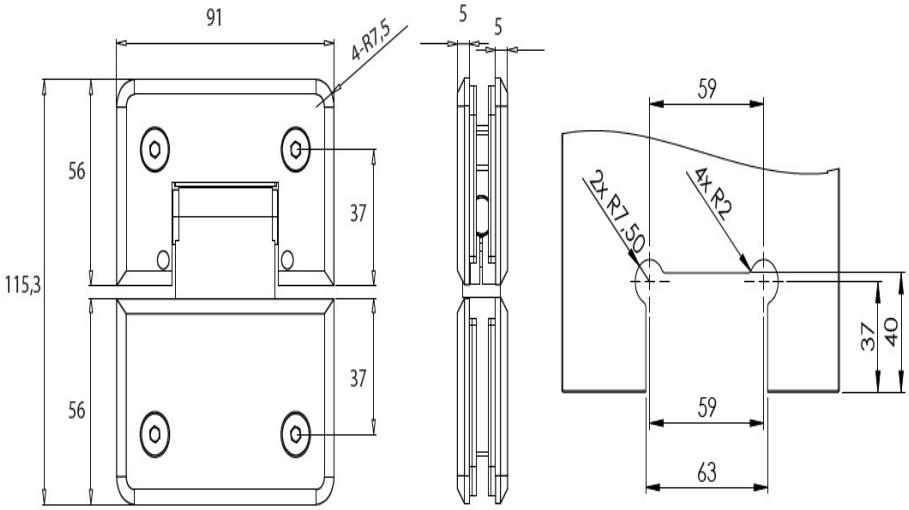


**SISO A/S**
Mileparken 11
DK-2740 Skovlunde
Denmark
VAT: DK 24786013

Phone +45 45 830 900

www.siso.dk
siso@siso.dk

Danske Bank
Nytorv Branch
Copenhagen
SWIFT: DABADKKK

Account no.
4180 3112 112936
IBAN Account
DK7230003112112936